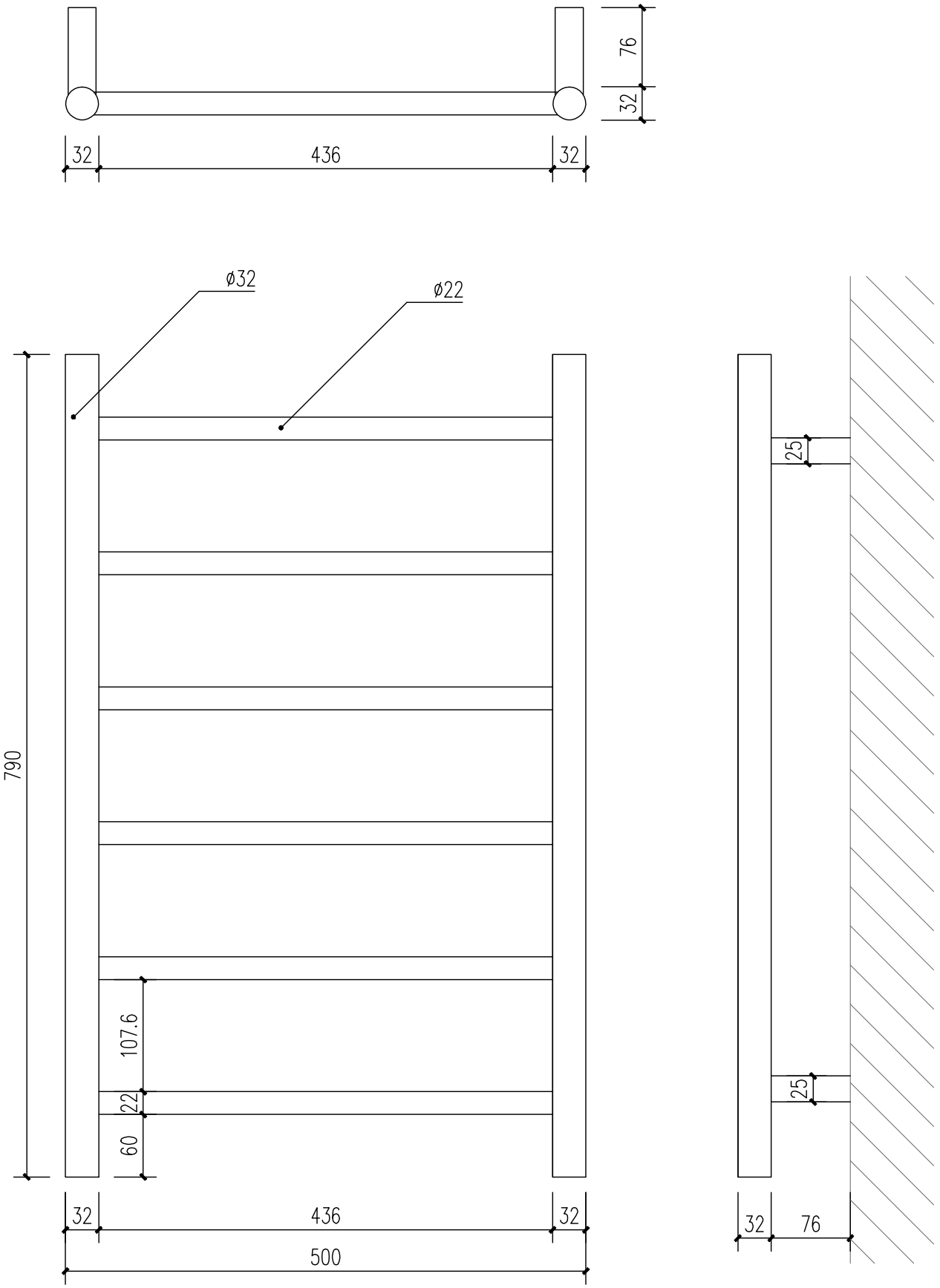

TLHQR08G-7ESD32D22